DOOR TYPE A

DOOR

EXISTING DOOR TO BE REFURBISHED

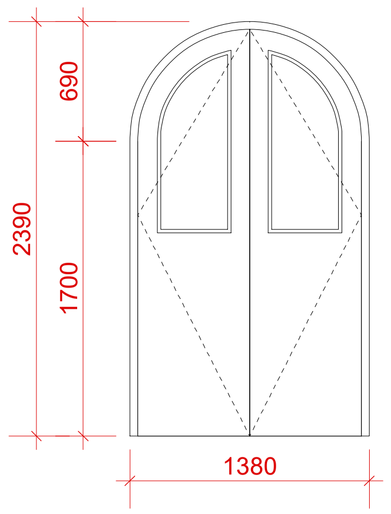

DOOR NO.	01
QUANTITY	1no.
TYPE	OUTWARD OPENING TIMBER DOOR
PROPOSED	EXISTING WINDOWS AND DOORS TO BE REFURBISHED.
FINISH / COLOUR	TIMBER WINDOWS AND DOORS: TO BE RUBBED DOWN WITH WATER ABRASIVE PAPER, PRIMED & PAINTED WITH TWO COATS OF SATIN PAINT FINISH OVER ONE COAT PRIMER, RAL COLOUR TO BE APPROVED BY THE ARCHITECT SAMPLE OF THE WORK TO BE PROVIDED FOR APPROVAL BY THE CLIENT AND THE ARCHITECT
GLAZING	EXISTING DOUBLE GLAZING TO BE INSPECTED AND REPLACED WHERE NESSESSARY.
DRAUGHT PROOFING	ALLOW FOR SUPPLY & FIT OF DRAUGHT STRIP SYSTEM IN LIGHT GREY COLOUR TO ALL WINDOWS
IRONMONGERY	EXISTING IRONMONGERY TO BE INSPECTED AND REPLACED LIKE FOR LIKE WHERE REQUIRED.

DOOR TYPE B

DOOR

EXISTING DOOR TO BE REFURBISHED

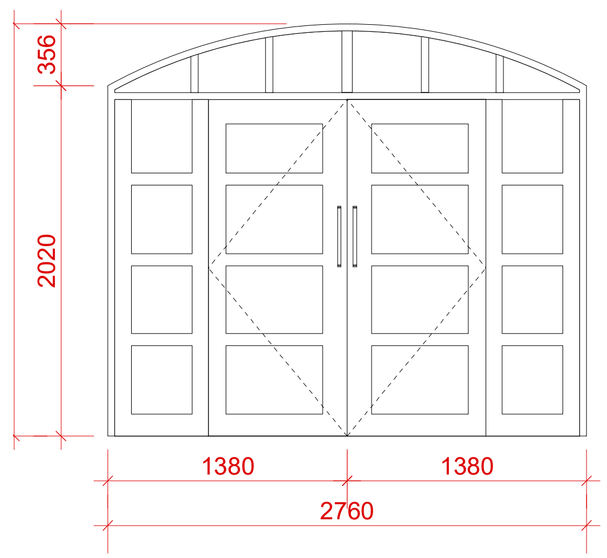

DOOR NO.	02, 03, 04 & 05
QUANTITY	4no.
TYPE	OUTWARD OPENING TIMBER DOOR & GLAZING
PROPOSED	EXISTING WINDOWS AND DOORS TO BE REFURBISHED.
FINISH / COLOUR	TIMBER WINDOWS AND DOORS: TO BE RUBBED DOWN WITH WATER ABRASIVE PAPER, PRIMED & PAINTED WITH TWO COATS OF SATIN PAINT FINISH OVER ONE COAT PRIMER, RAL COLOUR TO BE APPROVED BY THE ARCHITECT SAMPLE OF THE WORK TO BE PROVIDED FOR APPROVAL BY THE CLIENT AND THE ARCHITECT
GLAZING	EXISTING DOUBLE GLAZING TO BE INSPECTED AND REPLACED WHERE NESSESSARY.
DRAUGHT PROOFING	ALLOW FOR SUPPLY & FIT OF DRAUGHT STRIP SYSTEM IN LIGHT GREY COLOUR TO ALL WINDOWS
IRONMONGERY	EXISTING IRONMONGERY TO BE INSPECTED AND REPLACED LIKE FOR LIKE WHERE REQUIRED.

DOOR TYPE C

DOOR

EXISTING DOOR TO BE REFURBISHED

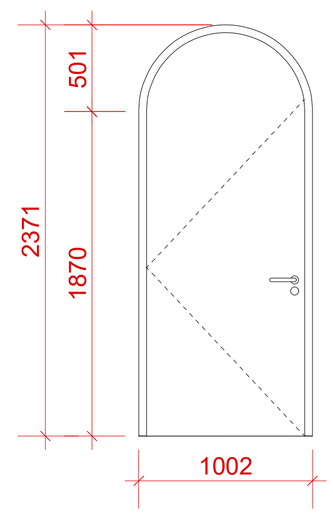

DOOR NO.	06
QUANTITY	1no.
TYPE	OUTWARD OPENING TIMBER DOOR
PROPOSED	EXISTING WINDOWS AND DOORS TO BE REFURBISHED.
FINISH / COLOUR	TIMBER WINDOWS AND DOORS: TO BE RUBBED DOWN WITH WATER ABRASIVE PAPER, PRIMED & PAINTED WITH TWO COATS OF SATIN PAINT FINISH OVER ONE COAT PRIMER, RAL COLOUR TO BE APPROVED BY THE ARCHITECT SAMPLE OF THE WORK TO BE PROVIDED FOR APPROVAL BY THE CLIENT AND THE ARCHITECT
GLAZING	N/A
DRAUGHT PROOFING	ALLOW FOR SUPPLY & FIT OF DRAUGHT STRIP SYSTEM IN LIGHT GREY COLOUR TO ALL WINDOWS
IRONMONGERY	EXISTING IRONMONGERY TO BE INSPECTED AND REPLACED LIKE FOR LIKE WHERE REQUIRED.

DOOR TYPE D

DOOR

EXISTING DOOR TO BE REFURBISHED

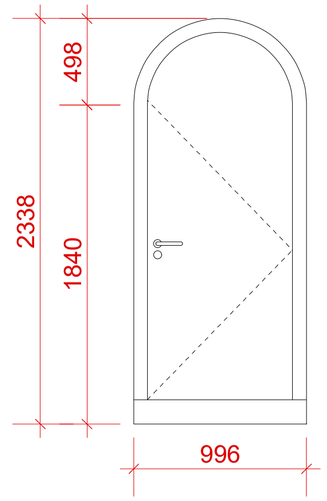

DOOR NO.	07
QUANTITY	1no.
TYPE	INWARD OPENING TIMBER DOOR
PROPOSED	EXISTING WINDOWS AND DOORS TO BE REFURBISHED.
FINISH / COLOUR	TIMBER WINDOWS AND DOORS: TO BE RUBBED DOWN WITH WATER ABRASIVE PAPER, PRIMED & PAINTED WITH TWO COATS OF SATIN PAINT FINISH OVER ONE COAT PRIMER, RAL COLOUR TO BE APPROVED BY THE ARCHITECT SAMPLE OF THE WORK TO BE PROVIDED FOR APPROVAL BY THE CLIENT AND THE ARCHITECT
GLAZING	N/A
DRAUGHT PROOFING	ALLOW FOR SUPPLY & FIT OF DRAUGHT STRIP SYSTEM IN LIGHT GREY COLOUR TO ALL WINDOWS
IRONMONGERY	EXISTING IRONMONGERY TO BE INSPECTED AND REPLACED LIKE FOR LIKE WHERE REQUIRED.

WINDOW TYPE A

WINDOW

EXISTING WINDOWX TO BE REFURBISHED

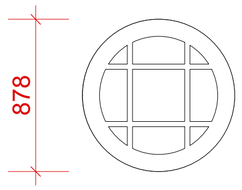

WINDOW NO.	01 & 05
QUANTITY	2no.
TYPE	OUTWARD OPENING TIMBER WINDOW
PROPOSED	EXISTING WINDOWS AND DOORS TO BE REFURBISHED.
FINISH / COLOUR	TIMBER WINDOWS AND DOORS: TO BE RUBBED DOWN WITH WATER ABRASIVE PAPER, PRIMED & PAINTED WITH TWO COATS OF SATIN PAINT FINISH OVER ONE COAT PRIMER, RAL COLOUR TO BE APPROVED BY THE ARCHITECT SAMPLE OF THE WORK TO BE PROVIDED FOR APPROVAL BY THE CLIENT AND THE ARCHITECT
GLAZING	EXISTING DOUBLE GLAZING TO BE INSPECTED AND REPLACED WHERE NESSESSARY.
DRAUGHT PROOFING	ALLOW FOR SUPPLY & FIT OF DRAUGHT STRIP SYSTEM IN LIGHT GREY COLOUR TO ALL WINDOWS
IRONMONGERY	EXISTING IRONMONGERY TO BE INSPECTED AND REPLACED LIKE FOR LIKE WHERE REQUIRED.

WINDOW TYPE B

WINDOW

EXISTING WINDOW TO BE REFURBISHED

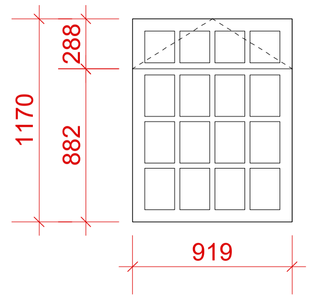

WINDOW NO.	02
QUANTITY	1no.
TYPE	OUTWARD OPENING TIMBER WINDOW
PROPOSED	EXISTING WINDOWS AND DOORS TO BE REFURBISHED.
FINISH / COLOUR	TIMBER WINDOWS AND DOORS: TO BE RUBBED DOWN WITH WATER ABRASIVE PAPER, PRIMED & PAINTED WITH TWO COATS OF SATIN PAINT FINISH OVER ONE COAT PRIMER, RAL COLOUR TO BE APPROVED BY THE ARCHITECT SAMPLE OF THE WORK TO BE PROVIDED FOR APPROVAL BY THE CLIENT AND THE ARCHITECT
GLAZING	EXISTING DOUBLE GLAZING TO BE INSPECTED AND REPLACED WHERE NESSESSARY.
DRAUGHT PROOFING	ALLOW FOR SUPPLY & FIT OF DRAUGHT STRIP SYSTEM IN LIGHT GREY COLOUR TO ALL WINDOWS
IRONMONGERY	EXISTING IRONMONGERY TO BE INSPECTED AND REPLACED LIKE FOR LIKE WHERE REQUIRED.

WINDOW TYPE C

WINDOW

EXISTING WINDOW TO BE REFURBISHED

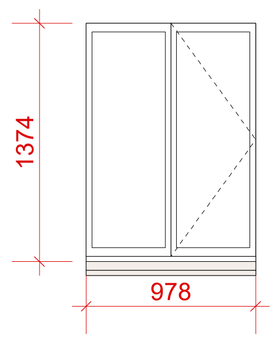

WINDOW NO.	03 & 04
QUANTITY	2no.
TYPE	OUTWARD OPENING TIMBER WINDOW
PROPOSED	EXISTING WINDOWS AND DOORS TO BE REFURBISHED.
FINISH / COLOUR	TIMBER WINDOWS AND DOORS: TO BE RUBBED DOWN WITH WATER ABRASIVE PAPER, PRIMED & PAINTED WITH TWO COATS OF SATIN PAINT FINISH OVER ONE COAT PRIMER, RAL COLOUR TO BE APPROVED BY THE ARCHITECT SAMPLE OF THE WORK TO BE PROVIDED FOR APPROVAL BY THE CLIENT AND THE ARCHITECT
GLAZING	EXISTING DOUBLE GLAZING TO BE INSPECTED AND REPLACED WHERE NESSESSARY.
DRAUGHT PROOFING	ALLOW FOR SUPPLY & FIT OF DRAUGHT STRIP SYSTEM IN LIGHT GREY COLOUR TO ALL WINDOWS
IRONMONGERY	EXISTING IRONMONGERY TO BE INSPECTED AND REPLACED LIKE FOR LIKE WHERE REQUIRED.

DOOR TYPE E

DOOR

EXISTING DOOR TO BE REFURBISHED

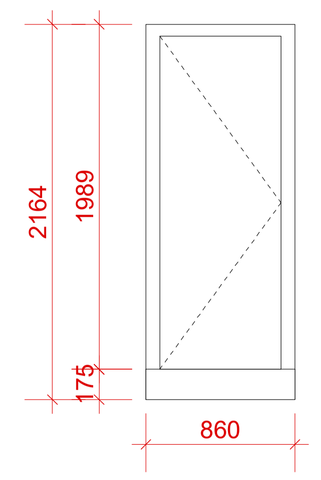

DOOR NO.	08
QUANTITY	1no.
TYPE	INWARD OPENING TIMBER DOOR
PROPOSED	EXISTING WINDOWS AND DOORS TO BE REFURBISHED.
FINISH / COLOUR	TIMBER WINDOWS AND DOORS: TO BE RUBBED DOWN WITH WATER ABRASIVE PAPER, PRIMED & PAINTED WITH TWO COATS OF SATIN PAINT FINISH OVER ONE COAT PRIMER, RAL COLOUR TO BE APPROVED BY THE ARCHITECT SAMPLE OF THE WORK TO BE PROVIDED FOR APPROVAL BY THE CLIENT AND THE ARCHITECT
GLAZING	N/A
DRAUGHT PROOFING	ALLOW FOR SUPPLY & FIT OF DRAUGHT STRIP SYSTEM IN LIGHT GREY COLOUR TO ALL WINDOWS
IRONMONGERY	EXISTING IRONMONGERY TO BE INSPECTED AND REPLACED LIKE FOR LIKE WHERE REQUIRED.

LEGEND /

- Demolition - Works
- Proposed - Works
- Existing Building
- Existing Roof Slates to be carefully removed and stored safely during the works. Allow for existing slates to be cleanned before re-laiding them.

ALL DRAWINGS ARE COPYRIGHT OF A2 ARCHITECTS LTD. © 2017

ALL DIMENSIONS AND LEVELS TO BE CHECKED ON SITE PRIOR TO THE COMMENCEMENT OF WORK. DRAWINGS ARE NOT TO BE SCALED. USE ONLY FIGURED DIMENSIONS.

REVISIONS /

REV.	DATE	DESCRIPTION

A2 ARCHITECTS LTD
20 ORMOND QUAY UPPER,
DUBLIN 7 IRELAND
D07 TK75
t / +353 1 8727393
f / +353 1 8727394
e/ office@a2.ie
w/ www.a2.ie

DRAWING / Window Schedule 01

ISSUE / PLANNING

DATE / 6/2/26
SCALE / 1:50@A1/1:100@A3
DRAWN / LP

PROJECT / Garnish Island
CLIENT / Office of Public Works

JOB NO. / 810

DWG NO. / A700

REV. / --